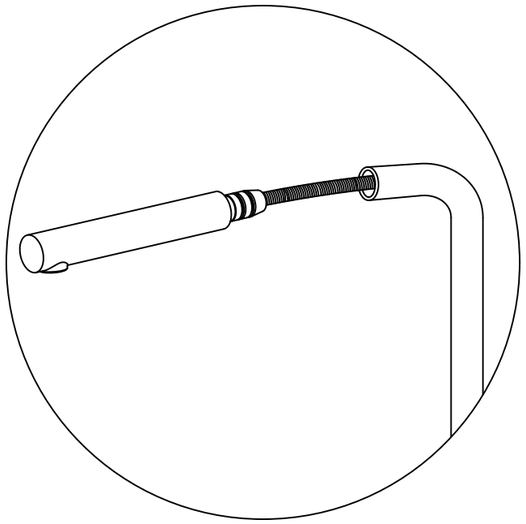

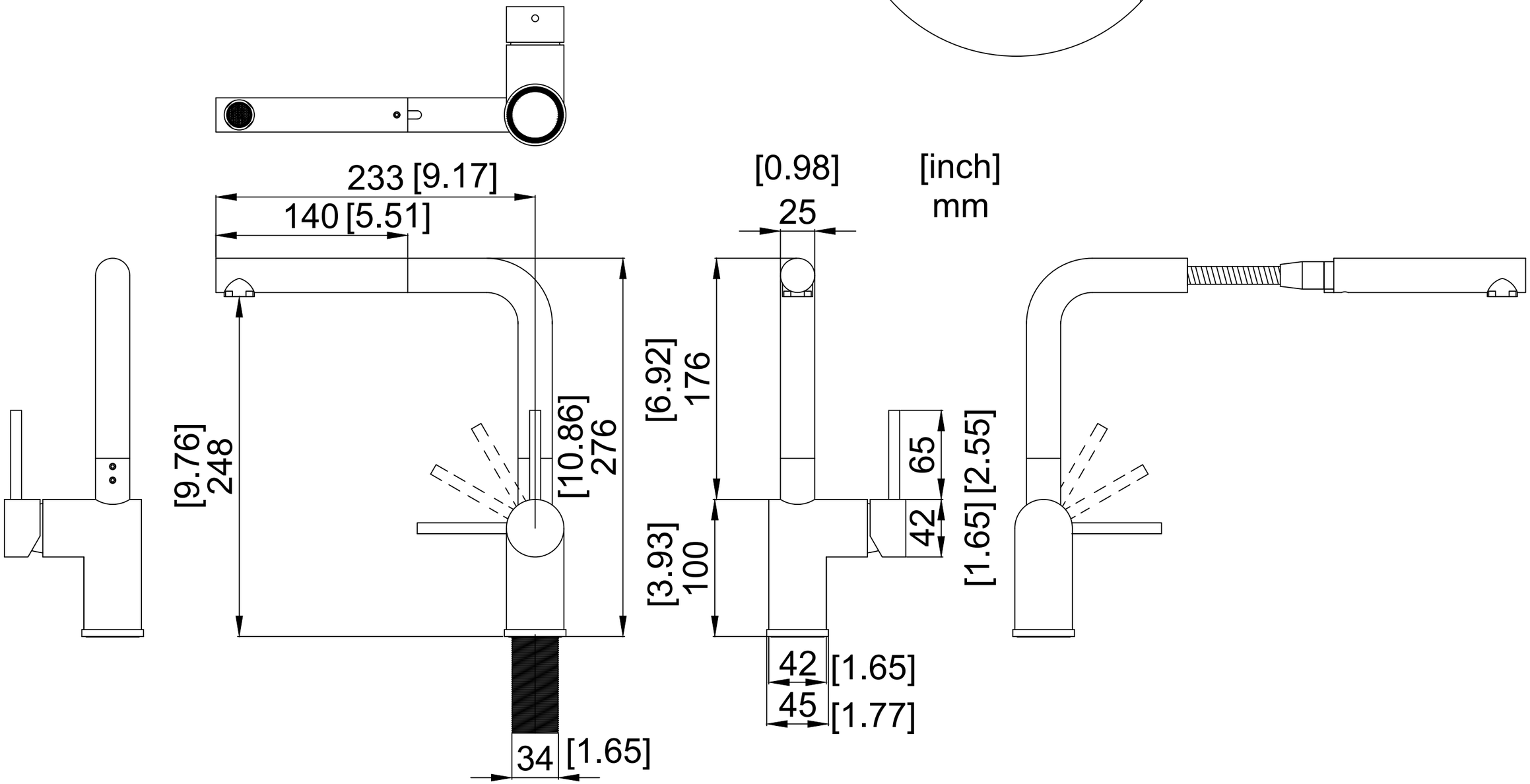
233 [9.17]
140 [5.51]
[9.76]
248
[10.86]
276
[0.98]
25
[inch]
mm
[6.92]
176
65
42
[2.55]
[1.65]
[3.93]
100
42 [1.65]
45 [1.77]
34 [1.65]