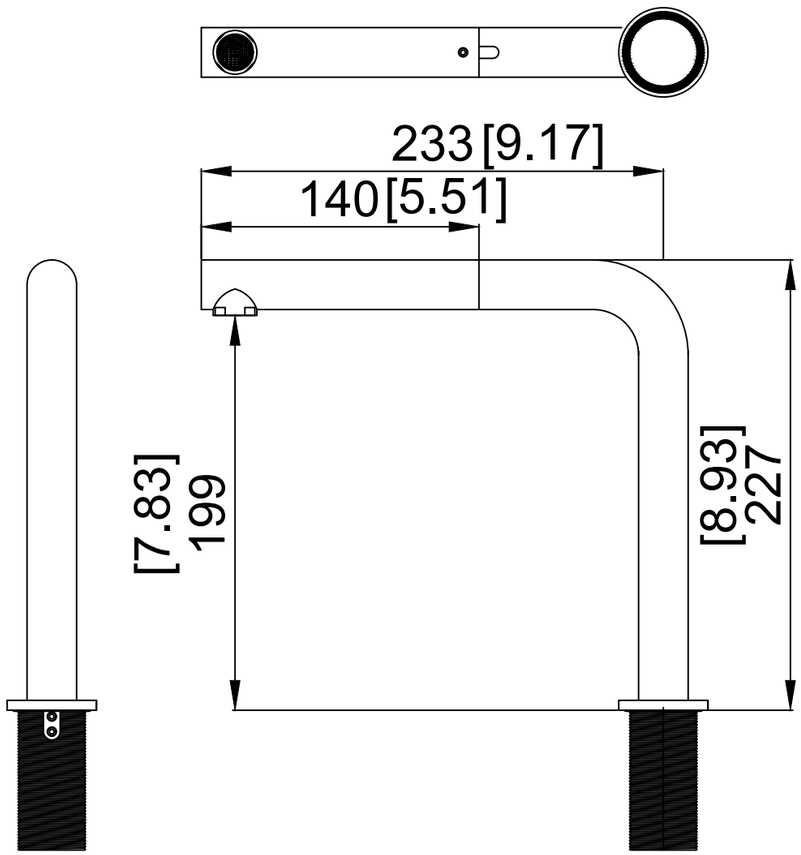
233 [9.17]
140 [5.51]
[7.83]
199
[8.93]
227

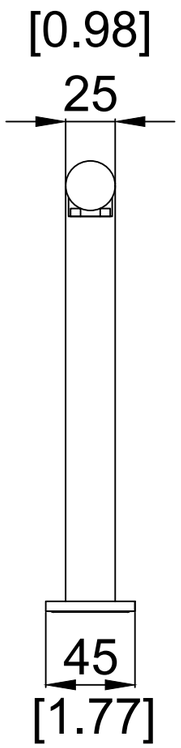
[0.98]
25
45
[1.77]

[inch]
mm

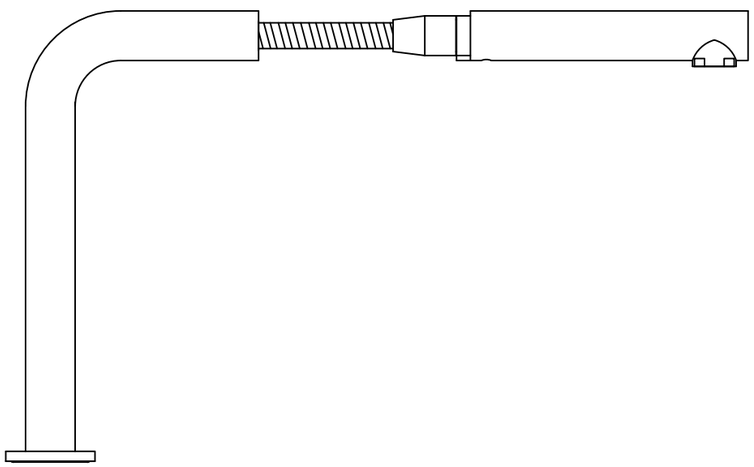

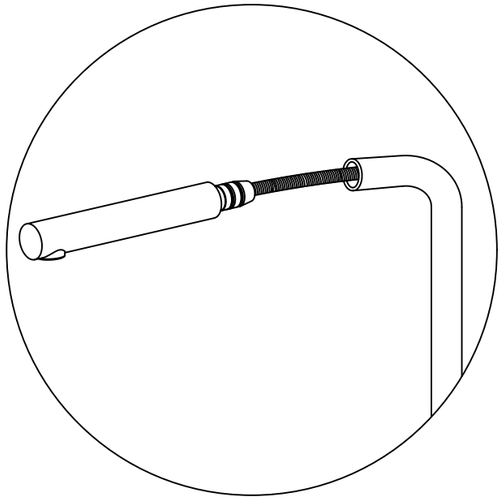

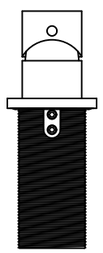

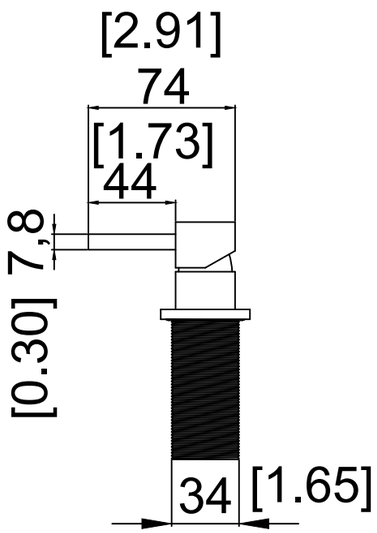
[2.91]
74
[1.73]
44
7,8
[0.30]
34
[1.65]

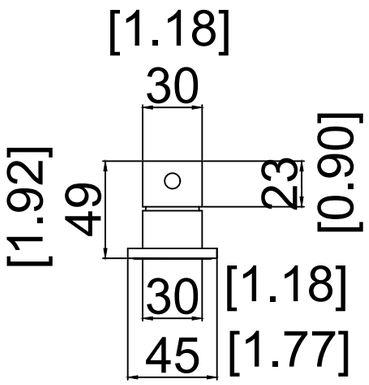
[1.18]
30
[1.92]
49
23
[0.90]
30
[1.18]
45
[1.77]